Work Order ID 71764

Monday, July 11, 2011 11:13:21 AM

Item ID: D4314-3 **Accept** **Setup Start** **Stop**

Revision ID:

Item Name: Shim

Start Date: 7/11/2011 **Start Qty:** 4.00 **Cust Item ID:**

Required Date: 7/18/2011 **Req'd Qty:** 4.00 **Customer:**

Reference:

Approvals: **Process Plan:** ✓ **Date:** 11-07-11 **Tooling:** _____ **Date:** _____ **Run Start** **Stop**

QC: _____ **Date:** _____ **SPC (Y/N):** _____ **Date:** _____

Sequence ID/ Work Center ID	Operation Description	Set Up/ Run Hours	Tool ID	Tool #	Plan Code	Accept Qty	Reject Qty	Reject Number	Insp. Stamp
Draw Nbr / **Revision Nbr**									
D4314 / A									
100	FLOW WATER JET	0.00							
Waterjet	**Memo**	0.00				TB11-8-2			
FLOW CNC Waterjet 6061 . 188	1-Cut as per Dwg D4314 Dwg Rev: A Prog Rev: D 2-Deburr if necessary								(4)
110	QC2- Inspect parts off machine FAI/FAIB	0.00							
QC	**Memo**	0.00				TB11-8-2			
Quality Control									
120	QC8- Inspect parts - second check	0.00							
QC	**Memo**	0.00				(-4)			
Quality Control									

S w/08/12

Dart Aerospace Ltd

W/O:		WORK ORDER CHANGES					
DATE	STEP	PROCEDURE CHANGE	By	Date	Qty	Approval Chief Eng / Prod Mgr	Approval QC Inspector

Part No: _____ **PAR #:** _____ **Fault Category:** _____ **NCR:** Yes No **DQA:** _____ **Date:** _____

Resolution: _____ **Disposition:** _____ **QA: N/C Closed:** _____ **Date:** _____

NCR:		WORK ORDER NON-CONFORMANCE (NCR)						
DATE	STEP	Description of NC Section A	Corrective Action Section B			Verification Section C	Approval Chief Eng	Approval QC Inspector
			Initial Chief Eng	Action Description Chief Eng	Sign & Date			

NOTE: Date & initial all entries

H:\fFORMS\Quality Assurance\approved QA\NCRWO RevE

Work Order ID 71764

Monday, July 11, 2011 11:13:21 AM

Item ID: D4314-3 **Accept** **Setup Start**

Revision ID: **Stop**

Item Name: Shim

Start Date: 7/11/2011 **Start Qty:** 4.00 **Cust Item ID:**

Required Date: 7/18/2011 **Req'd Qty:** 4.00 **Customer:**

Reference:

Approvals: **Process Plan:** _____ **Date:** _____ **Tooling:** _____ **Date:** _____ **Run Start**

QC: _____ **Date:** _____ **SPC (Y/N):** _____ **Date:** _____ **Stop**

Sequence ID/ Work Center ID	Operation Description	Set Up/ Run Hours	Tool ID	Tool #	Plan Code	Accept Qty	Reject Qty	Reject Number	Insp. Stamp
130		0.00							
Small Fab	Small Fab								
Small Fab	**Memo**	0.00				1	11-08-12		
Small Fab	COUNTER SINK AS PER DWG								
150	QC5- Inspect part completeness to step on W/O	0.00							
QC									
Quality Control	**Memo**	0.00	Sulo 8/12			40			
160	Chemical Conversion Coat per QSI005 4.1	0.00							
HandFinish									
Hand Finishing	**Memo**	0.00				1	11-08-12		

Dart Aerospace Ltd

W/O:		WORK ORDER CHANGES					
DATE	STEP	PROCEDURE CHANGE	By	Date	Qty	Approval Chief Eng / Prod Mgr	Approval QC Inspector

Part No: _____ **PAR #:** _____ **Fault Category:** _____ **NCR:** Yes No **DQA:** _____ **Date:** _____

Resolution: _____ **Disposition:** _____ **QA: N/C Closed:** _____ **Date:** _____

NCR:		WORK ORDER NON-CONFORMANCE (NCR)						
DATE	STEP	Description of NC Section A	Corrective Action Section B			Verification Section C	Approval Chief Eng	Approval QC Inspector
			Initial Chief Eng	Action Description Chief Eng	Sign & Date			

NOTE: Date & initial all entries

Work Order ID 71764

Monday, July 11, 2011 11:13:21 AM

Item ID: D4314-3 **Accept** **Setup Start** **Stop**

Revision ID:

Item Name: Shim

Start Date: 7/11/2011 **Start Qty:** 4.00 **Cust Item ID:**

Required Date: 7/18/2011 **Req'd Qty:** 4.00 **Customer:**

Reference:

Approvals: **Process Plan:** _____ **Date:** _____ **Tooling:** _____ **Date:** _____ **Run Start** **Stop**

QC: _____ **Date:** _____ **SPC (Y/N):** _____ **Date:** _____

Sequence ID/ Work Center ID	Operation Description	Set Up/ Run Hours	Tool ID	Tool #	Plan Code	Accept Qty	Reject Qty	Reject Number	Insp. Stamp
170	QC3- Inspect Part Finish	0.00							
QC	Memo	0.00				(44)			
Quality Control									
180	Identify as per dwg & Stock Location: 133	0.00							
Packaging	Memo	0.00							
Packaging									
190	QC21- Final Inspection - Work Order Release	0.00							
QC	Memo	0.00							
Quality Control									

S 11/08/12

11/11/12

CK 11/08/12

MC 11-08-12

Dart Aerospace Ltd

W/O:		WORK ORDER CHANGES					
DATE	STEP	PROCEDURE CHANGE	By	Date	Qty	Approval Chief Eng / Prod Mgr	Approval QC Inspector

Part No: _____ **PAR #:** _____ **Fault Category:** _____ **NCR:** Yes No **DQA:** _____ **Date:** _____

Resolution: _____ **Disposition:** _____ **QA: N/C Closed:** _____ **Date:** _____

NCR:		WORK ORDER NON-CONFORMANCE (NCR)						
DATE	STEP	Description of NC Section A	Corrective Action Section B			Verification Section C	Approval Chief Eng	Approval QC Inspector
			Initial Chief Eng	Action Description Chief Eng	Sign & Date			

NOTE: Date & initial all entries

H:\fFORMS\Quality Assurance\approved QA\NCRWO RevE

Picklist Print

Monday, July 11, 2011 11:13:27 AM

Work Order ID: 71764

Parent Item: D4314-3

Parent Item Name: Shim

Start Date: 7/11/2011 **Required Date:** 7/18/2011

Start Qty: 4.00 **Required Qty:** 4.00

Comments: IPP REV:A NEW ISSUE 11-02-02 JLM VERIFIED BY:DD

Component Item ID/ Item Name	Replacement Item ID	Mfg/ Purch	Bin Item	Primary Location	Last Location	Route Seq ID	Unit of Measure	Qty on Hand	Qty per Kit	Total Qty	Qty Issued	Date Issued	Status
M6061T6S.188 6061-T6 .188 Sheet		Purchased	No			100	sf	30.5000	0.0194	0.081684 B 11-8-2			

Location	Loc Qty	Loc Code
MAT021	30.5	
116604	30.5	

116604

4

Dart Aerospace Ltd

W/O:		WORK ORDER CHANGES					
DATE	STEP	PROCEDURE CHANGE	By	Date	Qty	Approval Chief Eng / Prod Mgr	Approval QC Inspector

Part No: _____ **PAR #:** _____ **Fault Category:** _____ **NCR:** Yes No **DQA:** _____ **Date:** _____

Resolution: _____ **Disposition:** _____ **QA: N/C Closed:** _____ **Date:** _____

NCR:		WORK ORDER NON-CONFORMANCE (NCR)						
DATE	STEP	Description of NC Section A	Corrective Action Section B			Verification Section C	Approval Chief Eng	Approval QC Inspector
			Initial Chief Eng	Action Description Chief Eng	Sign & Date			

NOTE: Date & initial all entries

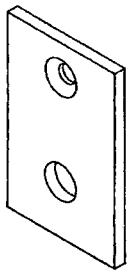

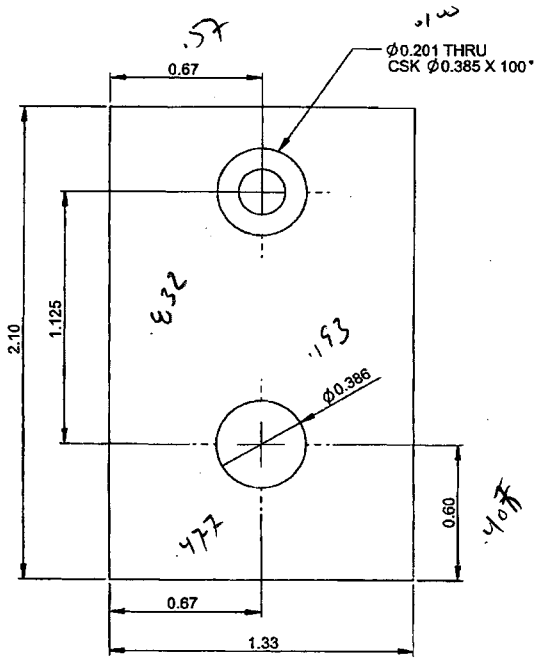

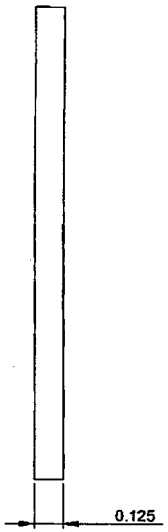

RE
ENG
UNCONT
SUBJECT TO AMEND
WITHOUT NOTICE
BACK ORDER
71769
R110711

RELEASED
2011-02-
MB

D4314-1 SHIM

NOTES:
1) MATERIAL: ALUMINUM 2024-T3 SHEET PER QQ-A-250/4 OR AMS-QQ-A-250/4
OR AMS 4037 OR ASTM B209 (REF DART SPEC M2024T3S.125)
OR
ALUMINUM 6061-T6/-T62 SHEET PER QQ-A-250/11 OR AMS-QQ-A-250/11
AMS 4025 OR AMS 4027 OR ASTM B209 (REF DART SPEC M6061T6S.125)
OR
ALUMINUM 5052-H32 SHEET PER QQ-A-250/8 OR AMS-QQ-A250/8
AMS 4016 OR ASTM B209 (REF DART SPEC M5052H32S.125)
2) FINISH: CHEMICAL CONVERSION COAT PER DART QSI 005 4.1
3) TOLERANCES: PER DART QSI 018 UNLESS OTHERWISE NOTED
4) UNITS: INCHES UNLESS OTHERWISE NOTED
5) BREAK SHARP EDGES: 0.005 TO 0.010 MAX
6) IDENTIFICATION: PER QSI 044 6.1
7) WEIGHT: 0.01 lbs

REV.	DESCRIPTION	BY	DATE
A	NEW ISSUE	SC	11.01.13

DESIGN	SC	DART AEROSPACE LTD HAWKESBURY, ONTARIO, CANADA
DRAWN	SC	
CHECKED		DRAWING NO. D4314 — REV. A — SHEET 1 OF 2
MFG. APPR.		
APPROVED		TITLE: SHIM — SCALE: NTS
DE APPR.		
DATE	11.01.13	

COPYRIGHT © 2011 BY DART AEROSPACE LTD
THIS DOCUMENT IS PRIVATE AND CONFIDENTIAL AND IS SUPPLIED ON THE EXPRESS CONDITION THAT IT IS NOT TO BE USED FOR ANY PURPOSE OR COPIED OR COMMUNICATED TO ANY OTHER PERSON WITHOUT WRITTEN PERMISSION FROM DART AEROSPACE LTD.

Dart Aerospace Ltd

W/O:		WORK ORDER CHANGES					
DATE	STEP	PROCEDURE CHANGE	By	Date	Qty	Approval Chief Eng / Prod Mgr	Approval QC Inspector

Part No: _____ **PAR #:** _____ **Fault Category:** _____ **NCR:** Yes No **DQA:** _____ **Date:** _____

Resolution: _____ **Disposition:** _____ **QA: N/C Closed:** _____ **Date:** _____

NCR:		WORK ORDER NON-CONFORMANCE (NCR)						
DATE	STEP	Description of NC Section A	Corrective Action Section B			Verification Section C	Approval Chief Eng	Approval QC Inspector
			Initial Chief Eng	Action Description Chief Eng	Sign & Date			

NOTE: Date & initial all entries

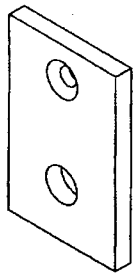

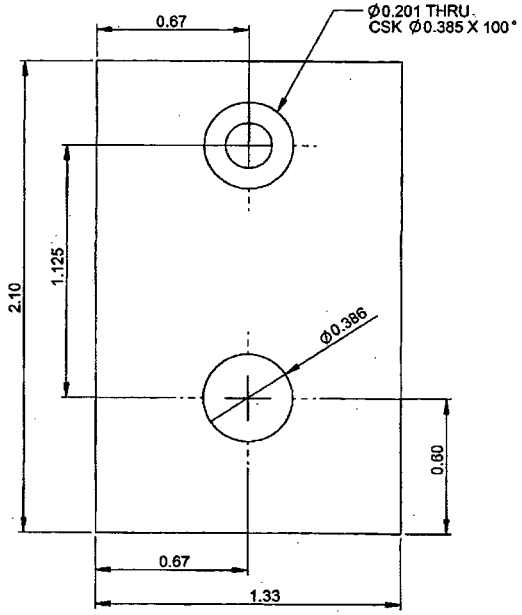

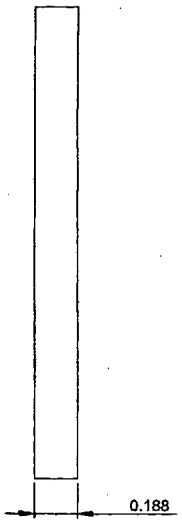

71764

D4314-3 SHIM

RELEASED
2011-02-01

NOTES:
1) MATERIAL: ALUMINUM 2024-T3 SHEET PER QQ-A-250/4 OR AMS-QQ-A-250/4
OR AMS 4037 OR ASTM B209 (REF DART SPEC M2024T3S.188)
OR
ALUMINUM 6061-T6/-T62 SHEET PER QQ-A-250/11 OR AMS-QQ-A-250/11
AMS 4025 OR AMS 4027 OR ASTM B209 (REF DART SPEC M6061T6S.188)
OR
ALUMINUM 5052-H32 SHEET PER QQ-A-250/8 OR AMS-QQ-A250/8
AMS 4016 OR ASTM B209 (REF DART SPEC M5052H32S.188)
2) FINISH: CHEMICAL CONVERSION COAT PER DART QSI 005 4.1
3) TOLERANCES: PER DART QSI 018 UNLESS OTHERWISE NOTED
4) UNITS: INCHES UNLESS OTHERWISE NOTED
5) BREAK SHARP EDGES: 0.005 TO 0.010 MAX
6) IDENTIFICATION: PER QSI 044 6.1
7) WEIGHT: 0.05 lbs

DESIGN	SC	**DART AEROSPACE LTD** HAWKESBURY, ONTARIO, CANADA
DRAWN	SC	
CHECKED		DRAWING NO. D4314 — REV. A — SHEET 2 OF 2
MFG. APPR.		
APPROVED		TITLE SHIM — SCALE NTS
DE APPR.		
DATE	11.01.13	

COPYRIGHT © 2011 BY DART AEROSPACE LTD
THIS DOCUMENT IS PRIVATE AND CONFIDENTIAL AND IS SUPPLIED ON THE EXPRESS CONDITION THAT IT IS NOT TO BE USED FOR ANY PURPOSE OR COPIED OR COMMUNICATED TO ANY OTHER PERSON WITHOUT WRITTEN PERMISSION FROM DART AEROSPACE LTD.

Dart Aerospace Ltd

W/O:		WORK ORDER CHANGES					
DATE	STEP	PROCEDURE CHANGE	By	Date	Qty	Approval Chief Eng / Prod Mgr	Approval QC Inspector

Part No: _____ **PAR #:** _____ **Fault Category:** _____ **NCR:** Yes No **DQA:** _____ **Date:** _____

Resolution: _____ **Disposition:** _____ **QA: N/C Closed:** _____ **Date:** _____

NCR:		WORK ORDER NON-CONFORMANCE (NCR)						
DATE	STEP	Description of NC Section A	Corrective Action Section B			Verification Section C	Approval Chief Eng	Approval QC Inspector
			Initial Chief Eng	Action Description Chief Eng	Sign & Date			

NOTE: Date & initial all entries

DART AEROSPACE LTD	Work Order: 71764
Description: Shim	Part Number: D4314-3
Inspection Dwg: D4314-3, Rev: A	Page 1 of 1

FIRST ARTICLE INSPECTION CHECKLIST

[X] First Article [X] Prototype

Drawing Dimension	Tolerance	Actual Dimension	Accept	Reject	Method of Inspection	Comments
Ø .201	+.005 -.001	.201	✓		V BOZ	
.386	+/- .010	.382	✓		V	
.67	+/- .030	.6666	✓		V	
1.125	+/- .010	1.125	✓		V	
.60	+/- .030	.608	✓		V	
1.33	+/- .030	1.342	✓		V	
2.10	+/- .030	2.107	✓		V	
.188	+/- .010	.186	✓		V	

Measured by: B	Audited by: S	Prototype Approval:
Date: 11-8-2	Date: 11/08/2	Date:

Rev	Date	Change	Revised by	Approved
A		New issue	KJ/JLM	